# PATENT SPECIFICATION

Application Date: Sept. 18, 1925. No. 23,283/25. **262,200**

Complete Left: July 17, 1926.

Complete Accepted: Dec. 9, 1926.

PROVISIONAL SPECIFICATION.

## Improvements in, and relating to Game Apparatus.

I, ALFRED LEONARD WALTON, of 26, Withnell Road, Blackpool, in the County of Lancashire, a British subject, do hereby declare the nature of this invention to be as follows:—

This invention relates to game apparatus, and provides means whereby two opposing players, or two teams of players, may retard or neutralize, each other's efforts.

The present invention comprises essentially, an improved mechanism, adapted to be operated by suitable controls, and so arranged that a differential motion is imparted to an indicating device arranged for a game.

In one form of this invention, an indicating device is arranged, with suitable apparatus and background, to represent the game known as "tug of war", and consists of two teams of suitable figures, apparently tugging at each other through the medium of a rope.

The two sets of figures are fixed to a slidably mounted bar, which is provided with suitable means, such as springs, or weights, which tend to keep the bar in a zero position.

This bar is suitably geared to the member of a differential gear box which carries the intermediate wheels, and each axial wheel of the differential is connected to a controlling handwheel, through suitable gearing, and in such a manner, that when the players are turning their respective handwheels, a differential motion is transmitted to the indicating device.

Means may be provided, and suitably arranged, to engage, or disengage the controls by hand, or to engage the controls by the insertion of a coin, or coins, and disengage the controls when the indicating device reaches a pre-determined position.

[~~Price 1/-~~]

Means may be provided and suitably arranged, to discharge a coin, or coins, when the indicating device reaches a predetermined position.

The indicating device may represent any game of a suitable nature.

In a modification of this invention, controls are suitably geared to the respective members of a differential screw mechanism, and a differential motion is transmitted through suitable gearing to the indicating device.

In another modification of this invention, the indicating device is connected to a float, or piston, arranged in a vessel containing oil, or other suitable liquid, and means are provided to normally keep the vessel partially filled.

A series of pumps are connected to suitable controls, in such a manner that while one player, or a set of players, pump liquid into the vessel, the opposing player, or players, pump liquid out, and the resultant variation of the position of the float, or piston, is transmitted through suitable gearing to the indicating device.

Reserve liquid is carried in a vessel suitably connected to the pumps, and means are provided, such as clutches, valves, or taps, to engage or disengage the controls by hand, or to engage the controls by the insertion of a coin, or coins, and dis-engage the controls when the indicating device reaches a pre-determined position.

Means may be provided, and suitably arranged, to discharge a coin, or coins, when the indicating device reaches a predetermined position.

In another modification of this invention, air is substituted for liquid.

Dated the 16th day of September, 1925.

ALFRED LEONARD WALTON.

Price 75p

## COMPLETE SPECIFICATION.

# Improvements in, and relating to Game Apparatus.

I, ALFRED LEONARD WALTON, of 26, Withnell Road, Blackpool, in the County of Lancashire, a British subject, do hereby declare the nature of this invention and in what manner the same is to be performed, to be particularly described and ascertained in and by the following statement:—

This invention relates to game apparatus, and provides means whereby two opposing players, or two teams of players, may retard or neutralize each other's efforts.

The present invention comprises essentially, an improved mechanism, adapted to be operated by suitable controls, and so arranged that a differential motion is imparted to an indicating device arranged for a game.

In the accompanying drawing, Fig. 1 is an elevation of a game apparatus constructed according to this invention. Figs. 2, 3, 4, and 5, are elevations of modifications.

Referring to Fig. 1, which illustrates one form of this invention, an indicating device is arranged and may be provided with suitable apparatus and background, to represent the game known as "tug-of-war", and consists of two teams of suitable figures, apparently tugging at each other through the medium of a rope.

The two sets of figures are fixed to a slidably mounted bar $a$, and provided with suitable means such as springs or weights, to tend to keep the indicating bar $a$ in a central or zero position. In the example shown, a weight $b$ is carried by a cord or chain $c$ fixed to the indicating bar $a$, and the said cord passes freely between the two studs $d$, which are fixed to the stationary bracket $e$.

When the indicating bar $a$ is moved to either the right, or to the left, the weight $b$ will be lifted, and thereby tend to return the bar $a$ to the centre or zero position.

The bar $a$ is connected to the member of a differential gear mechanism which carries the intermediate or planetary wheel or wheels $g$, which connection in this case is the spiral gear $f$, which is suitably geared to the spiral rack cut in bar $a$, and the axial wheels $h$ and $h^1$, are driven through shafts $i$ and $i^1$, gears $j$ and $j^1$, from handwheels $k$ and $k^1$.

Clutches $l$ and $l^1$ are arranged to connect the motion from the handwheels, either by hand, or by known means, through the medium of coin operated mechanism, and disconnect the said handwheels either by hand, or by other known means when the indicating bar reaches a predetermined position, and known means may be provided to discharge a coin or coins when the indicating device reaches a pre-determined position.

When the clutches are in gear, and the handwheels $k$ and $k^1$ are caused to revolve in the same direction at equal speeds, motion is transmitted to the wheels $h$ and $h^1$, which will revolve at equal speeds, but in opposite directions, and cause the wheel $g$ to revolve on its own axis, without transmitting a motion to wheel $f$, and indicating bar $a$, but if one handwheel is caused to revolve at a different speed to the other, then the resultant differential motion will be transmitted through wheel $f$ to the indicating bar $a$.

The indicating device may be made in any suitable form, and may represent any game of a suitable nature.

Figure 2 illustrates a modified construction where two pairs of controlling handwheels are used, handwheel shafts $m$ and $m^1$ constituting one pair, and $n$ and $n^1$ constituting a second pair, and it will be readily understood that in this form of construction, any number of handwheels may be used, preferably, but not necessarily in pairs.

In this construction, the end wheels $o$ and $o^1$ must be stationary or dead wheels, and each handwheel shaft $n$, $n^1$, $m$ and $m^1$, transmit motion through worm wheels $p$, $p^1$, $q$ and $q^1$ to the planetary members of the differential gears $r$, $r^1$, $s$ and $s^1$. Motions generated by handwheel shafts $n$ and $n^1$ are transmitted from the dead wheels $o$ and $o^1$, through planetary gears $r$ and $r^1$ to shafts $t$ and $t^1$, then through planetary gears $s$ and $s^1$, to shafts $i$ and $i^1$, and if handwheel shafts $m$ and $m^1$ are turning, they will transmit an additional motion to shafts $i$ and $i^1$, from shafts $t$ and $t^1$, through planetary wheels $s$ and $s^1$, and the resultant motions are transmitted through differential gears $h$, $h^1$, $g$ and $f$ to the indicating bar $a$ in a manner as previously described for Fig. 1.

A feature of this construction is that each handwheel adds its own share to the

final motion, and when a number of handwheels are employed, say six pairs, then the combined efforts of a team of six players against an opposing team of six players will be shown by the indicating bar, or in the event of an unequal number of players, for example, six ladies opposing three gentlemen, a true indication of the combined efforts of each team of players will be shown at the indicating bar.

The direction of rotation of the various members of this construction are preferably as indicated by the arrows, when all the handwheel shafts are turning, but may be modified to suit convenience of construction, also, means are provided for returning the indicating bar to the zero position, as previously described.

Fig. 3 illustrates a modification in which the indicating bar *a* is freely connected to the flanged collar *u* on the shaft *v* through bracket *w*.

Handwheel shafts *n* and $n^1$ transmit motion through wormwheels *p* and $p^1$ to nut *x* and shaft *v* respectively, the latter being provided with a long spline, adapted to transmit motion from worm wheel $p^1$ by means of a suitable key as shown at *y*, and at the same time permit a longitudinal sliding motion of shaft *v*.

When the nut is engaging the thread on shaft *v*, and both nut and shaft are caused to revolve in the same direction at the same speed, no motion will be transmitted to the indicating bar, but if any variation in speed of rotation between the shaft *v* and nut *x* occurs, then a resultant differential motion is transmitted to the indicating bar *a*.

The body of nut *x* is bored to a clearance size, so as not to engage the threads of the screw on shaft *v*, but to act only as a bearing for the said shaft, and a spring operated, threaded die *z* is carried in the body of the nut *x* and adapted to engage the threads of the shaft *v*, and such engagement or disengagement is controlled by the position of the sliding flanged collar 2.

Means are provided for returning the indicating bar to a zero position as previously described.

Fig. 4 illustrates a modification in which the indicating bar *a* is connected to a float 3 by means of a cord or chain, and the said float is arranged in the vessel 5 which is partially filled with liquid, and also connected to a float 4, arranged in a vessel 6 which is also partially filled with liquid.

The two vessels are connected by the pipe 7, which is provided with a valve or tap 8, which can be opened so as to allow a free flow of liquid from one vessel to the other, and so keep a normal level of the liquid, and a central or zero position of the indicating bar *a*.

A pipe 9 and pump 10 are so arranged that liquid may be pumped from vessel 5 to vessel 6, and a pipe 11 and pump 12 are so arranged that liquid may be pumped from vessel 6 to vessel 5.

It will be readily understood that this arrangement may be further modified by using only one float 3, and substituting a weight or spring for float 4, so as to keep the float chain, or cord, in tension.

Any number of connecting pipes 9 and 11, and pumps 10 and 12 may be used, in which case one team of players would operate the handles which pump liquid from vessel 5 to vessel 6, and the opposing team would operate the handles which pump liquid from vessel 6 to vessel 5.

Before a game is started, the tap 8 is open, and liquid in the two vessels is at normal or equal level, and the indicating bar at zero position. Tap 8 is then closed, and the pump handles operated by the opposing players, until the level of the liquid in either tank rises to a predetermined point, when tap 8 is opened either by hand, or automatically, by suitable known means.

Fig. 5 illustrates a modification in which air is substituted for liquid, and is contained in the closed vessels 13 and 14, which may be in the form of bellows as shown, and arranged with one end fixed, and the other end free to rise or fall according to the volume of air within, and connection to the indicating bar is made as previously described.

Having now particularly described and ascertained the nature of my said invention and in what manner the same is to be performed, I declare that what I claim is:—

1. A game apparatus adapted to be operated by suitable controls, and so arranged that a differential motion is imparted to an indicating device arranged for a game, and means whereby two opposing players, or two teams of opposing players may retard or neutralize each other's efforts.

2. A game apparatus according to Claim 1, adapted to be operated by suitable controls, in which any form of differential motion or mechanism is used in conjunction with any form of indicating device.

3. Game apparatus constructed substantially as hereinbefore described and as illustrated by Figs. 1, 2, 3, 4 and 5 of the accompanying drawing.

Dated the 15th day of July, 1926.

ALFRED LEONARD WALTON.

Redhill: Printed for His Majesty's Stationery Office, by Love & Malcomson, Ltd.—1926.

[This Drawing is a reproduction of the Original on a reduced scale]

FIG. 1.

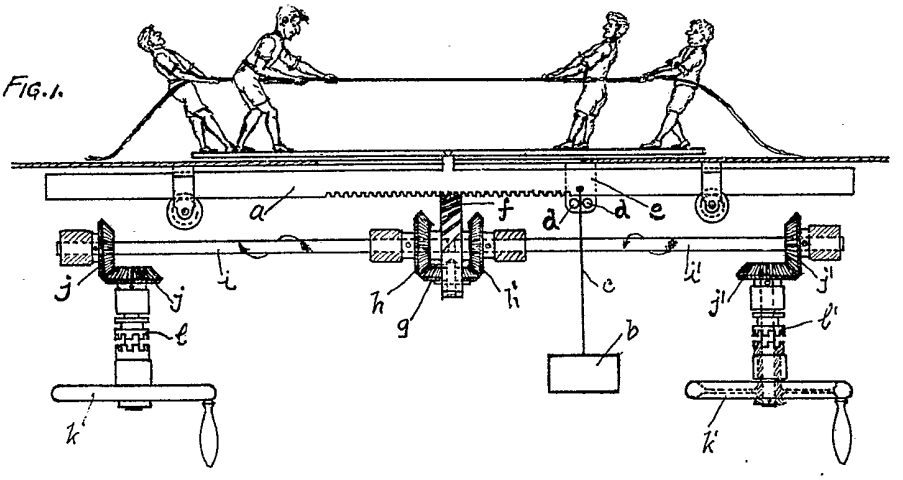


FIG. 2.

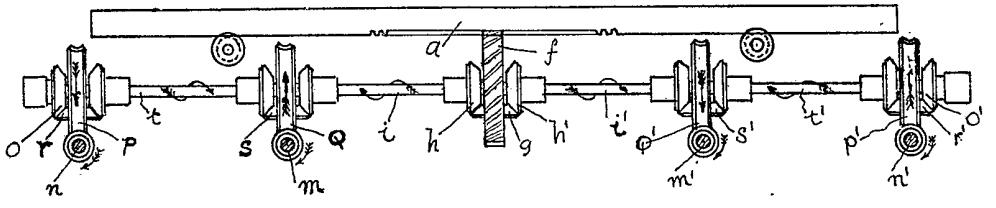


FIG 3.

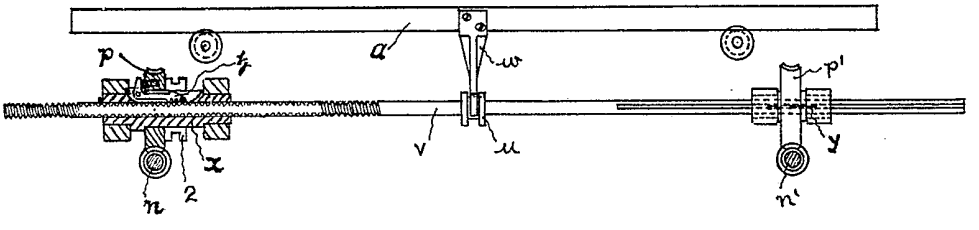


FIG. 4

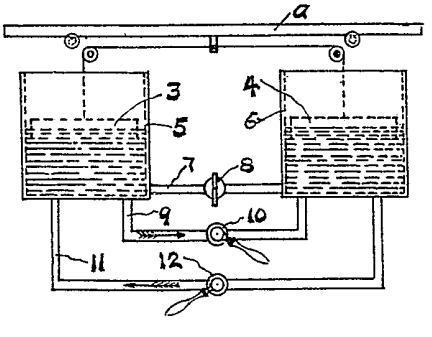


FIG. 5.

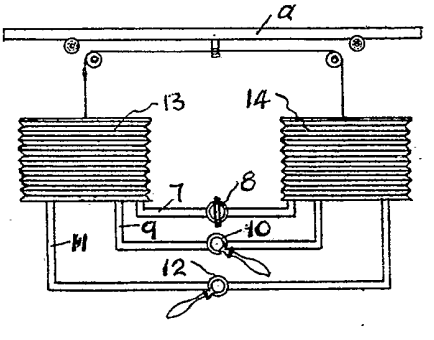


Charles & Read Ltd. Photo Litho.